INSTALLATION INSTRUCTIONS

RECESSED MOUNT KIT

5 YEAR LIMITED PRODUCT WARRANTY
Visit www.els-led.com for warranty for details
For support contact support@els-led.com

MODELS

Model	PNL1X4-RMDWKIT	PNL2X2-RMDWKIT	PNL2X4-RMDWKIT
Description	1X4 RECESSED MOUNT DRYWALL KIT	2X2 RECESSED MOUNT DRYWALL KIT	2X4 RECESSED MOUNT DRYWALL KIT
Hardware List	Short screws 9pcs Long screws 17pcs Anchors 17pcs	Short screws 9pcs Long screws 13pcs Anchors 13pcs	Short screws 9pcs Long screws 17pcs Anchors 17pcs
Recessed Frame Qty	Recessed Frame A 2pcs Recessed Frame B 2pcs	Recessed Frame 4pcs	Recessed Frame A 2pcs Recessed Frame B 2pcs
Recessed Frame Dimension	49.17''x13.27''x1.5''	25.16''x*25.16''x1.5''	49.17''x25.16''x1.5''

WARNING: RISK OF ELECTRICAL SHOCK
- Turn off the electrical power at fuse or circuit breaker box before wiring fixture to power supply.
- Turn off the power when you perform any maintenance.
- Verify that supply voltage is correct by comparing it with the luminaire label information.
- Make all electrical and grounded connections in accordance with the National Electrical Code and any applicable local code requirements.
- MIN 90°C SUPPLY CONDUCTORS.
- All wiring connections should be capped with UL approved wire connectors.

CAUTION: RISK OF INJURY
- Wear gloves and safety glasses at all times when removing luminaire from carton, installing, servicing or performing maintenance.
- Allow lamp/fixture to cool prior to handling light source.
- Avoid direct eye exposure to the light source while it is on.
- Account for small parts and destroy packing material, as these may be hazardous to children.
- Ensure fixtures are properly secured to and installed using all appropriate hardware intended to support the weight of the luminaire.

CAUTION: RISK OF FIRE
- Keep combustible and other materials that can burn away from luminaire and lamp/lens.

READ AND FOLLOW ALL SAFETY INSTRUCTIONS!
SAVE INSTRUCTIONS AND DELIVER TO OWNER AFTER INSTALLATION

General Safety & Product Information
- To reduce the risk of death, personal injury or property damage from fire, electric shock, falling parts, cuts/abrasions, and other hazards read all warnings and instructions included with and on the fixture box and all fixture labels.
- Commercial installation, service and maintenance of luminaires should be performed by a qualified licensed electrician.
- DO NOT INSTALL DAMAGED PRODUCT
- Use fixture only in intended application
- Allow for proper ventilation and air movement around luminaire. Do not exceed maximum ambient operating temperature
- Recycling information on LED Products please visit WWW.EPA.GOV
- These instructions may not cover all variations in equipment, application, operation and maintenance. Should further information be required please contact support@els-led.com
- Fixture components are not serviceable. In the event of product failure please refer to product warranty guidelines at www.els-led.com

ELEVATE LIGHTING SOLUTIONS
1000 Commerce Center Dr, Elkton MD 21921
Support@ELS-LED.com
els-led.com
(718).338.1851
Fax: (718).228.1851
orders@els-led.com

Recessed Mount Installation

1. Remove accessories from the package carefully. Put together the four-piece of drywall flange kits by using the supplied Short Screws . (Fig 1)
2. Place the installed drywall flange kit into the corresponding hole and secure it to the hole with the Long Screws . (Fig 2)

Size	Cut-Out Size(inch)
1’X4’ fixture	48.66 x 12.75
2’X2’ fixture	24.61 x 24.61
2’X4’ fixture	48.66 x 24.41

3. Place the panel into the flange kit and connect the input lines. Then the installation is complete. (Fig 3)

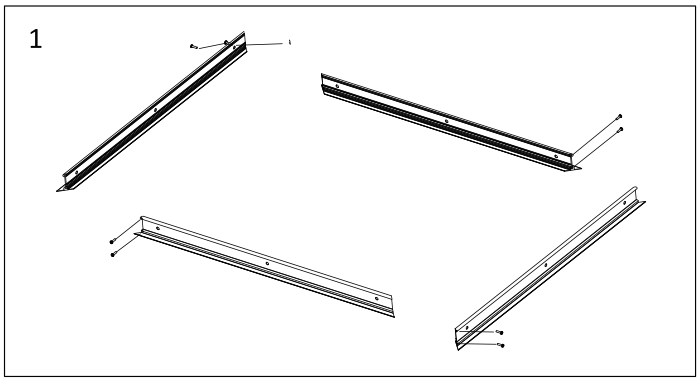

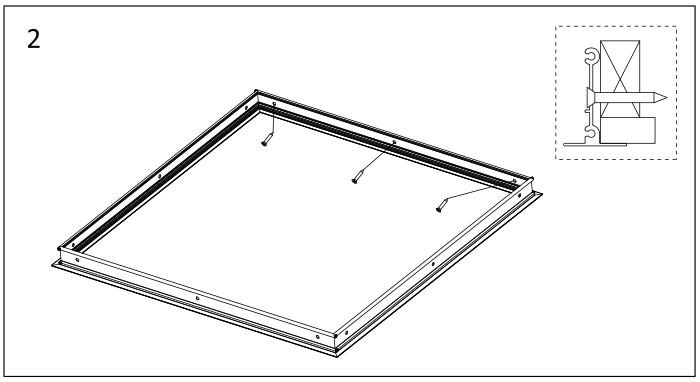

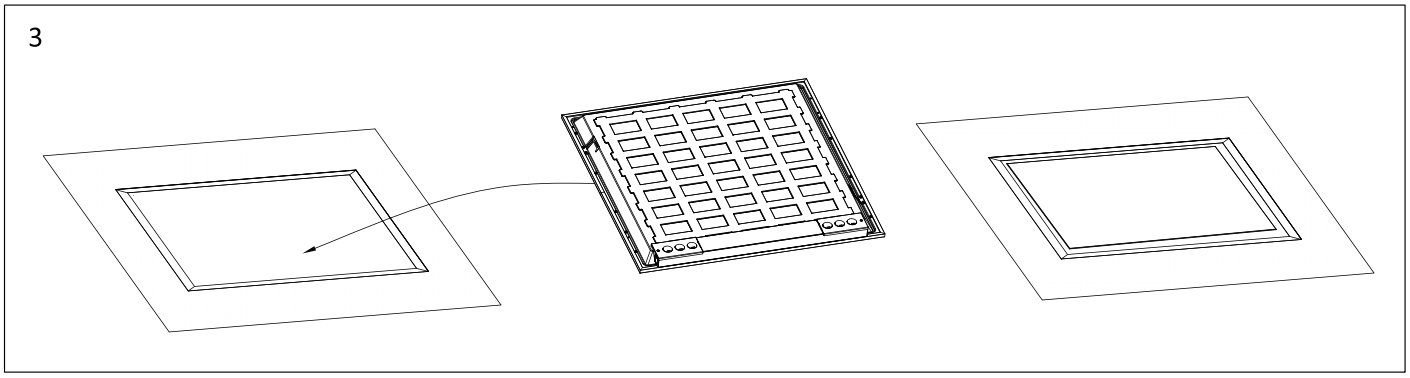

The Installation must be carried out by a qualified electrician.