INSTALLATION INSTRUCTIONS

LINEAR STRIP END TO END CONNECTOR KIT

5 YEAR LIMITED PRODUCT WARRANTY
Visit www.els-led.com for warranty for details
For support contact support@els-led.com

MODEL: LS-E2ECONN

WARNING: RISK OF ELECTRICAL SHOCK
- Turn off the electrical power at fuse or circuit breaker box before wiring fixture to power supply.
- Turn off the power when you perform any maintenance.
- Verify that supply voltage is correct by comparing it with the luminaire label information.
- Make all electrical and grounded connections in accordance with the National Electrical Code and any applicable local code requirements.
- MIN 90°C SUPPLY CONDUCTORS.
- All wiring connections should be capped with UL approved wire connectors.

CAUTION: RISK OF INJURY
- Wear gloves and safety glasses at all times when removing luminaire from carton, installing, servicing or performing maintenance.
- Allow lamp/fixture to cool prior to handling light source.
- Avoid direct eye exposure to the light source while it is on.
- Account for small parts and destroy packing material, as these may be hazardous to children.
- Ensure fixtures are properly secured to and installed using all appropriate hardware intended to support the weight of the luminaire.

CAUTION: RISK OF FIRE
- Keep combustible and other materials that can burn away from luminaire and lamp/lens.

READ AND FOLLOW ALL SAFETY INSTRUCTIONS!
SAVE INSTRUCTIONS AND DELIVER TO OWNER AFTER INSTALLATION

General Safety & Product Information
- To reduce the risk of death, personal injury or property damage from fire, electric shock, falling parts, cuts/abrasions, and other hazards read all warnings and instructions included with and on the fixture box and all fixture labels.
- Commercial installation, service and maintenance of luminaires should be performed by a qualified licensed electrician.
- DO NOT INSTALL DAMAGED PRODUCT
- Use fixture only in intended application
- Allow for proper ventilation and air movement around luminaire. Do not exceed maximum ambient operating temperature
- Recycling information on LED Products please visit WWW.EPA.GOV
- These instructions may not cover all variations in equipment, application, operation and maintenance. Should further information be required please contact support@els-led.com
- Fixture components are not serviceable. In the event of product failure please refer to product warranty guidelines at www.els-led.com

ELEVATE LIGHTING SOLUTIONS
1000 Commerce Center Dr, Elkton MD 21921
Support@ELS-LED.com
els-led.com
(718).338.1851
Fax: (718).228.1851
orders@els-led.com

INSTALLATION AND WIRING INSTRUCTION

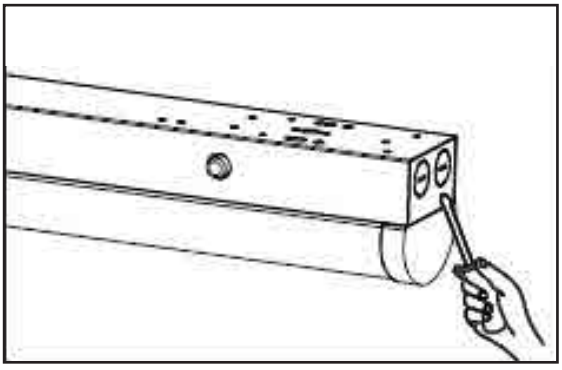

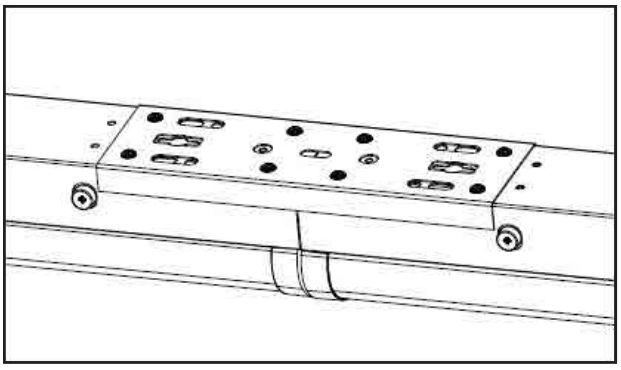

- Remove End Cap Knock Out
- Attached the Joining Plate between fiixtures and secure with supplied screws

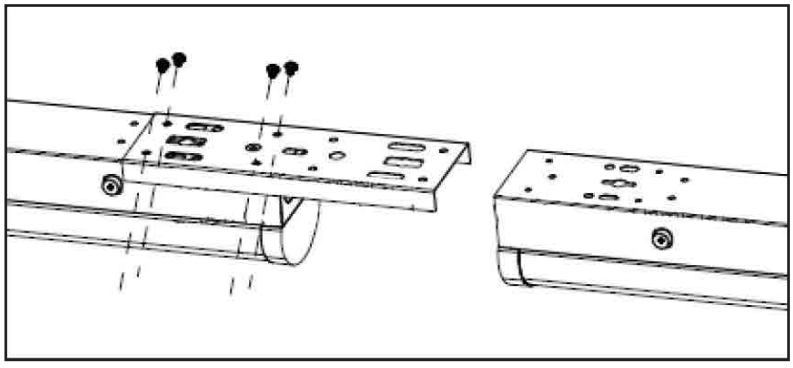

1. Attach the fixure to the supporting cables. Adjust aircraft cables to ensure fixture are hanging level. Ensure all hardware and support cables are tight

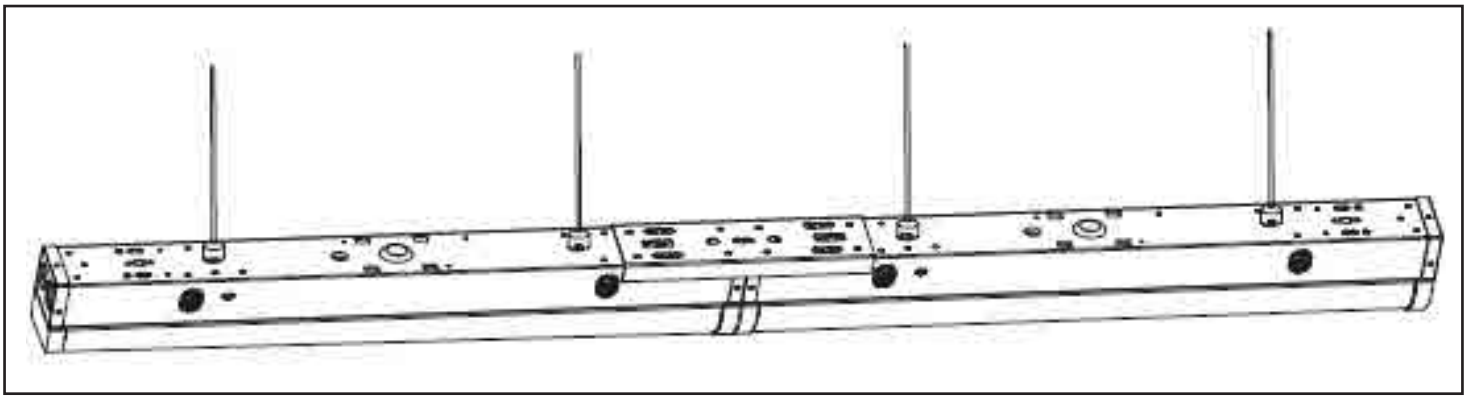

The Installation must be carried out by a qualified electrician

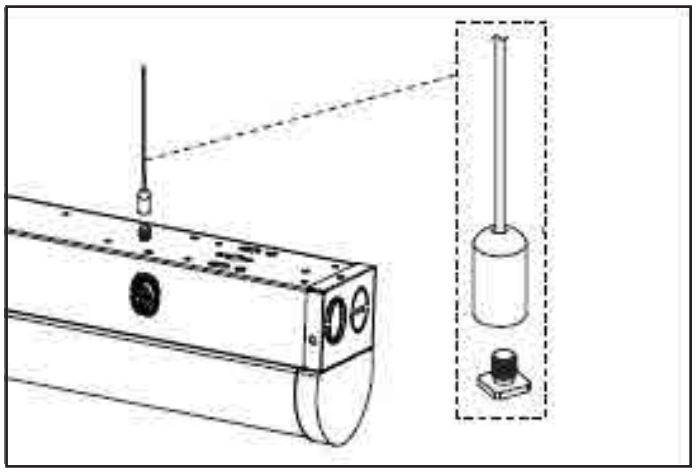

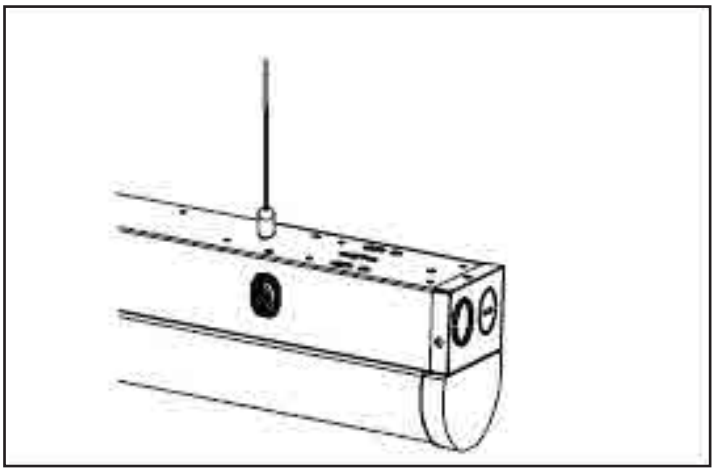

2. Remove lens assembly to gain access to wiring compartment
3. Pass wire harness through Knock Outs and make all electrical connections per below diagrams

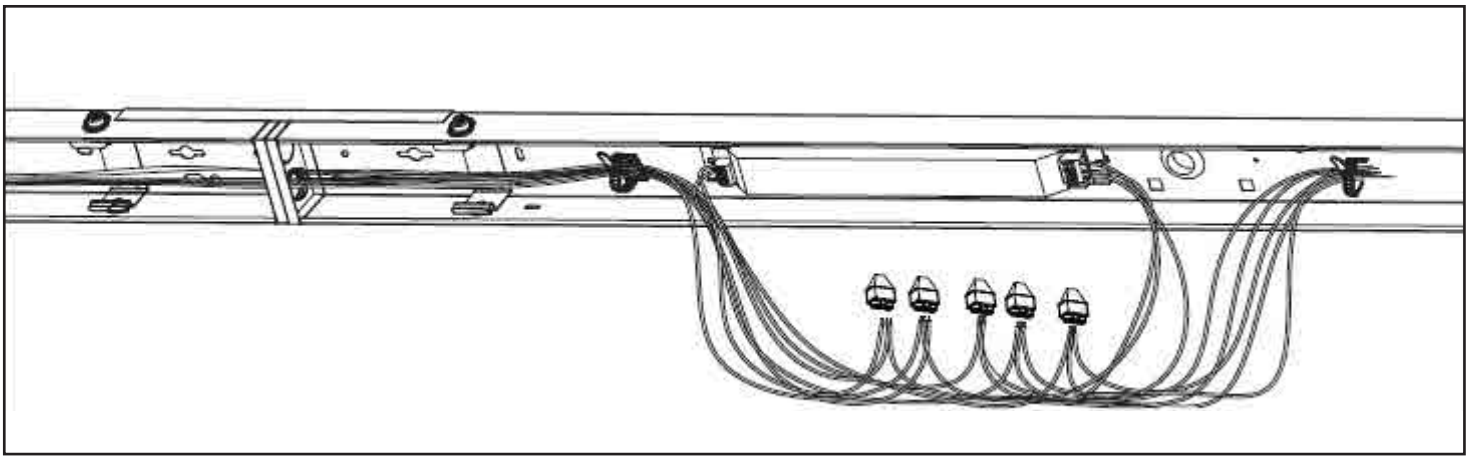

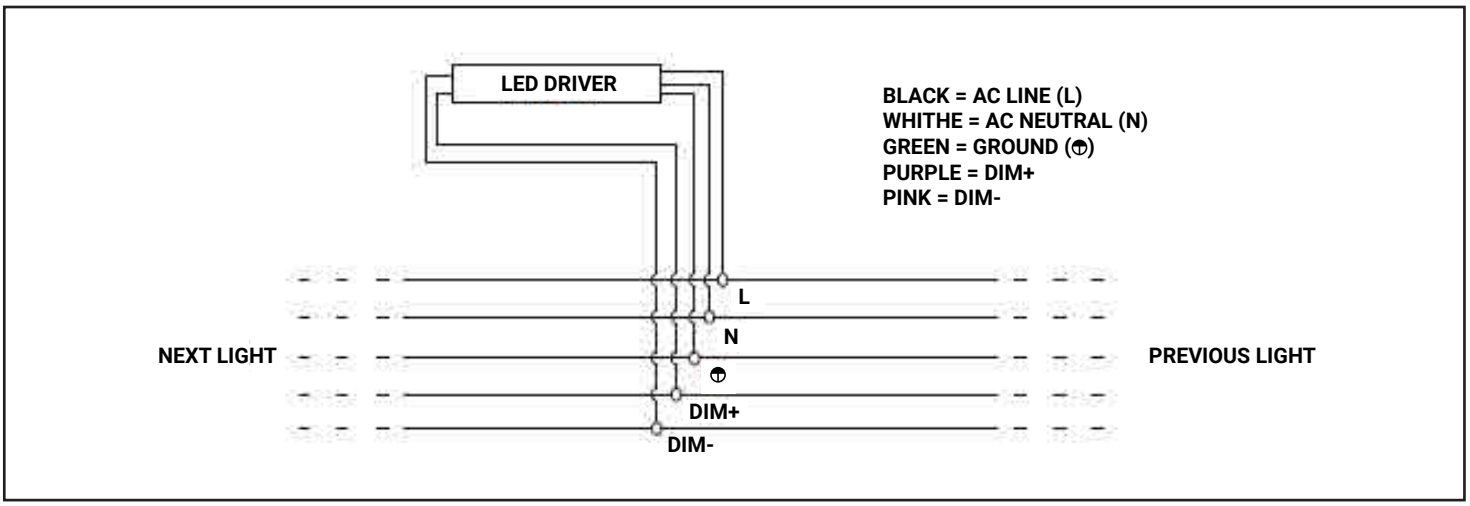

The Installation must be carried out by a qualified electrician

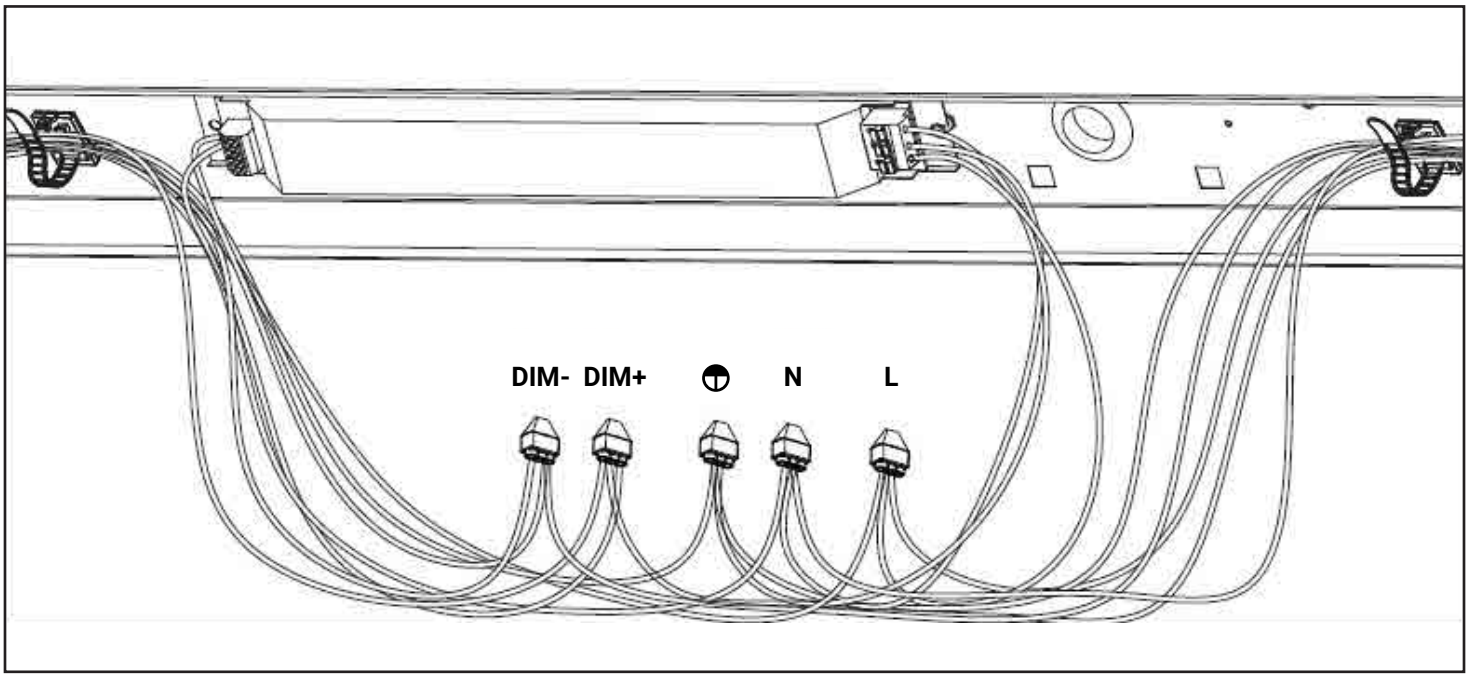

4. Once all wiring is complete, re-attach lens assembly to fixure taking care to ensure all wire within the housing
5. Complete the installation and energize the fixure

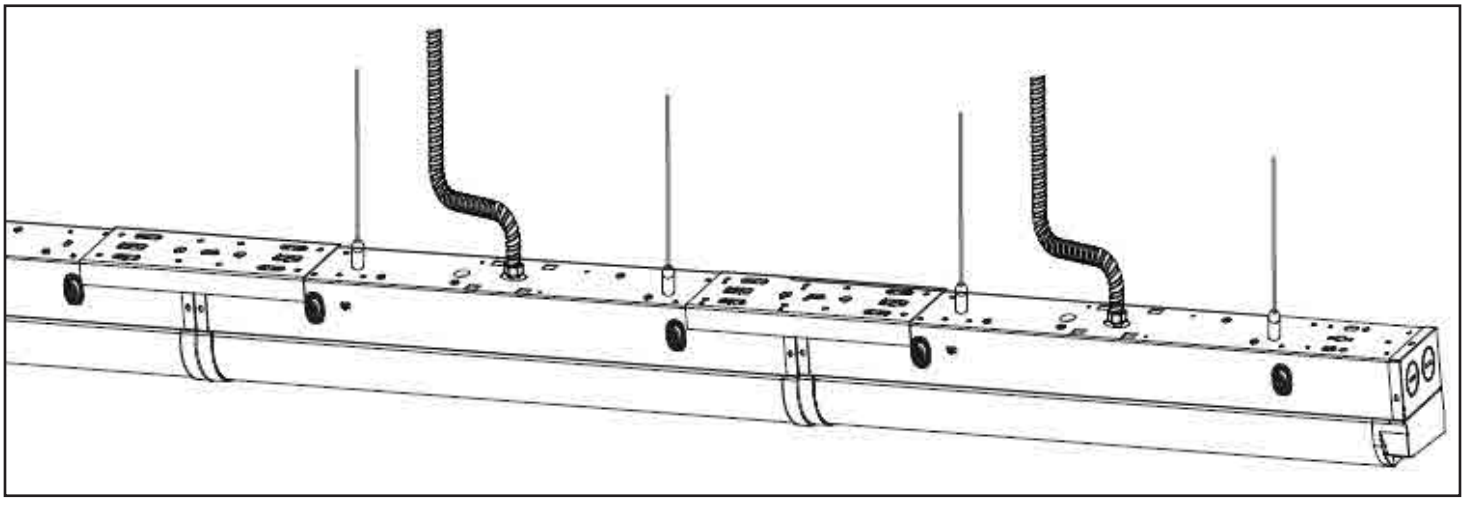

The Installation must be carried out by a qualified electrician