CATEGORY

LIGHTING & ACCESSORIES

AMMO ITEM #

ARVPF002

Company: _____

Job: _____ #Item: _____

Notes: _____

# Vapor Tight Wall Mount Fixture

UL LISTED

## FEATURES
- Metallic finish
- Wall mount
- All stainless steel hardware
- High temperature silicone internal gaskets
- Clear glass with threaded neck
- Threaded die-cast aluminum guard with a set screw for locking guard in place
- Suitable for wet locations and used in commercial and residential
- Lamp not included
- Finish: Natural aluminium

## SPECIFICATIONS
- Hub Size: 1/2" or 3/4" Tapped
- Hardware: All brass hardware
- Box: Precision die cast aluminum with four1/2" OR 3/4 NPT plugs installed and one open 1/2" OR 3/4" threaded conduit opening on the top
- One brass ground screw installed
- Gasket: Silicone gasket between the wiring box and the fitter
- Globes: Supplied with clear thermal shock resistant soda lime glass and the glass threaded
- Die Cast Guard: Threaded die cast aluminum with a set screw for locking the guard in place

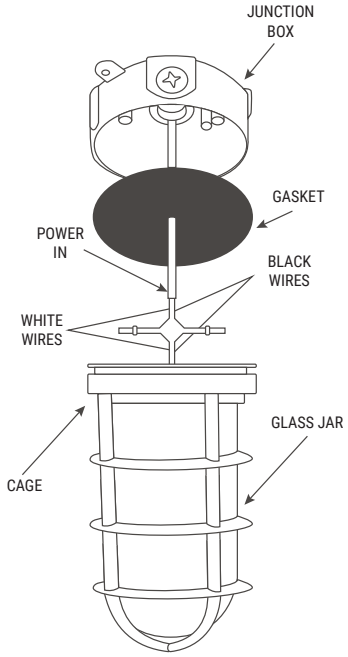


## ELECTRICAL
Maximum Watts: _____ 150 watts

## LAMP INFO
- Type: _____ E26
- Volts: _____ 120V
- Watts: _____ Max 150W
- Shape/Size: _____ Wall mount
- Base: _____ A19
- Hours: _____ 50000
- Weight: _____ 3.0 lbs

## PACKAGING
- PKG: _____ 6
- UPC Number: _____ 837654072998



Ammo Electric Inc.

400 MARTIN LUTHER KING JR WAY, BRIDGETON, NJ 08302
PHONE : (718).338.1851 FAX : (718).228.1851
orders@ammoelectric.com

www.ammoelectric.com